Background suppression sensor

GLV18-8-H-120/73/120

- Efficient Line in a short M18 plastic housing for standard applications
- Best background suppressor in its class
- Minimal black-white difference
- 4 LEDs indicator for 360° visibility
- Optimized potentiometer design for a clear control button layout in the application

Triangulation sensor with background suppression, M18 threaded housing design, plastic housing, front optical face, 120 mm detection range, red light, light/dark on, DC version, 2 PNP outputs, M12 plug

Function

The GLV/GLK18 series sensors help improve the efficiency of machines and systems. The design of the M18 plastic housing, the connection technology, and sensor properties are highly standardized. Concentrating on the key sensor requirements has produced a robust and reliable product series for DC and AC/DC voltage systems without any over-engineering. The mounting set included in the scope of delivery and the optimized potentiometer design ensure fast assembly and easy configuration.

Dimensions

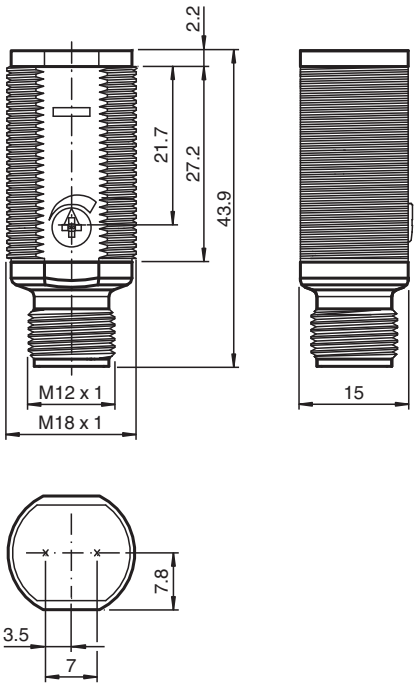

Release date: 2022-08-08 Date of issue: 2022-08-08 Filename: 212930_eng.pdf

Technical Data

General specifications		
Detection range		10 ... 120 mm
Detection range min.		10 ... 40 mm
Detection range max.		15 ... 120 mm
Adjustment range		40 ... 120 mm
Reference target		100 mm x 100 mm Kodak white
Light source		LED
Light type		modulated visible red light , 640 nm
Black-white difference (6 %/90 %)		< 6 %
Diameter of the light spot		approx. 6 mm at detection range 120 mm
Opening angle		approx. 2 °
Optical face		frontal
Ambient light limit		30000 Lux
Hysteresis	H	< 2 %
Functional safety related parameters		
$MTTF_d$		1340 a
Mission Time (T_M)		20 a
Diagnostic Coverage (DC)		0 %
Indicators/operating means		
Operation indicator		LED green, statically lit Power on
Function indicator		LED yellow: lights when object is detected
Control elements		Sensing range adjuster
Electrical specifications		
Operating voltage	U_B	10 ... 30 V DC
No-load supply current	I_0	< 15 mA
Output		
Switching type		light/dark on
Signal output		2 PNP, complementary, short-circuit protected, open collectors
Switching voltage		max. 30 V DC
Switching current		max. 100 mA
Voltage drop	U_d	≤ 1.5 V DC
Switching frequency	f	500 Hz
Response time		≤ 1 ms
Conformity		
Product standard		EN 60947-5-2
Approvals and certificates		
EAC conformity		TR CU 020/2011
Protection class		II, Rated insulation voltage ≤ 50 V AC with pollution degree 1-2 according to IEC 60664-1
UL approval		cULus Listed, Class 2 Power Source
CCC approval		CCC approval / marking not required for products rated ≤36 V
Ambient conditions		
Ambient temperature		-25 ... 60 °C (-13 ... 140 °F)
Storage temperature		-30 ... 70 °C (-22 ... 158 °F)
Mechanical specifications		
Degree of protection		IP67
Connection		4-pin, M12 x 1 connector
Material		
Housing		PC
Optical face		PMMA
Connector		plastic
Mass		approx. 10 g

Release date: 2022-08-08 Date of issue: 2022-08-08 Filename: 212930_eng.pdf

Connection

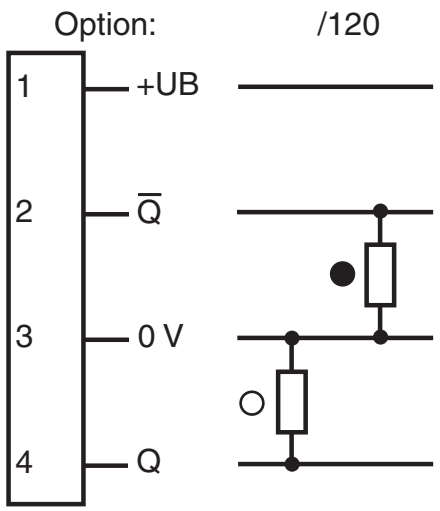

○ = Light on
● = Dark on

Connection Assignment

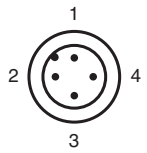

Wire colors in accordance with EN 60947-5-2

1	BN	(brown)
2	WH	(white)
3	BU	(blue)
4	BK	(black)

Assembly

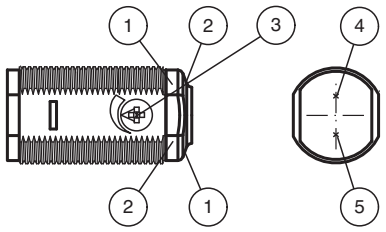

1	Operating display	green
2	Signal display	yellow
3	Detection range adjuster	
4	Emitter	
5	Receiver	

Release date: 2022-08-08 Date of issue: 2022-08-08 Filename: 212930_eng.pdf

Characteristic Curve

Characteristic response curve

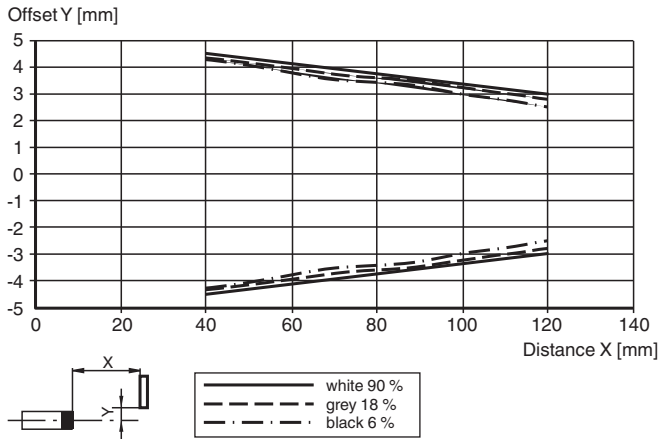

Difference in detection distance

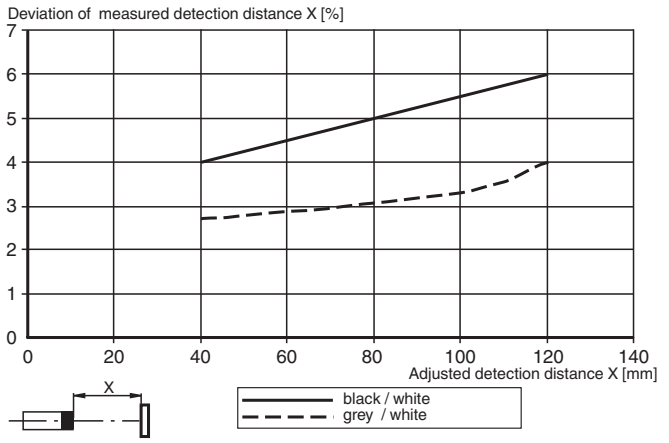

Accessories

	CPZ18B03	Mounting Bracket with swivel nut
	BF 18	Mounting flange, 18 mm
	BF 18-F	Plastic mounting adapter, 18 mm
	BF 5-30	Universal mounting bracket for cylindrical sensors with a diameter of 5 ... 30 mm
	V1-G-2M-PUR	Female cordset single-ended M12 straight A-coded, 4-pin, PUR cable grey
	V1-W-2M-PUR	Female cordset single-ended M12 angled A-coded, 4-pin, PUR cable grey

Release date: 2022-08-08 Date of issue: 2022-08-08 Filename: 212930_eng.pdf